Night Operations & Thermostat

Wiring Loop Diagram

Remove RED WIRE that originally connects terminal 3 and 2 whenever adding in a thermostat

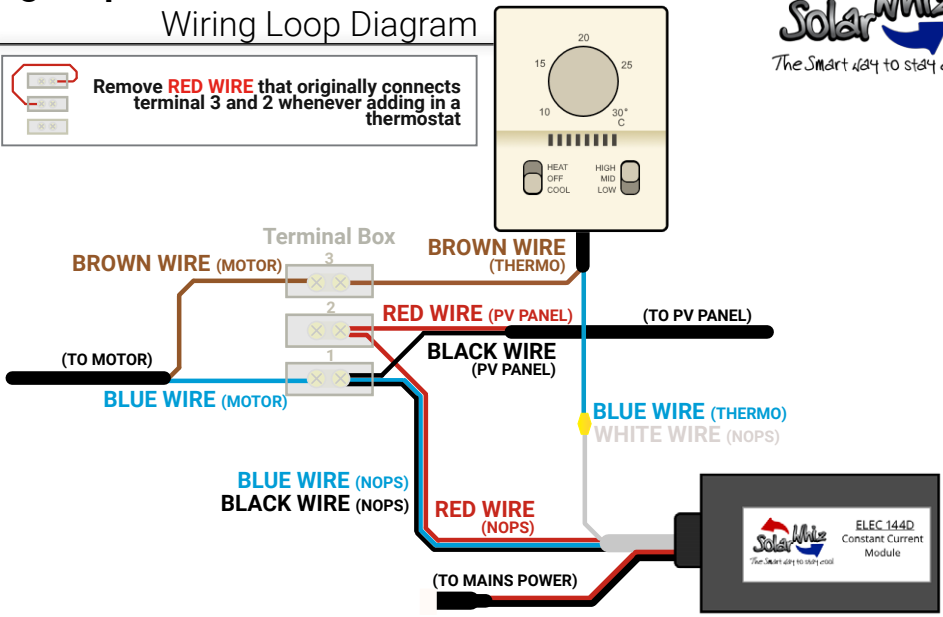

Thermostat

Wiring Loop Diagram

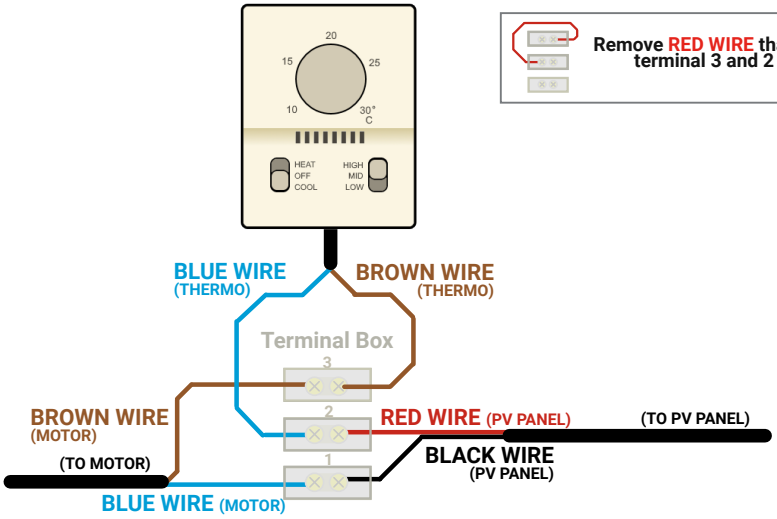

Remove RED WIRE that originally connects terminal 3 and 2 whenever adding in a thermostat